Electronics Basics

Topics

- Understand and recognise components
  - Capacitors
  - Resistors
  - Diodes
  - Transistors
- Using a multimeter
  - Voltage
  - Current
  - Resistance

Components - Capacitors

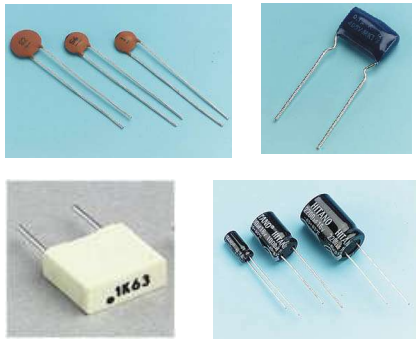

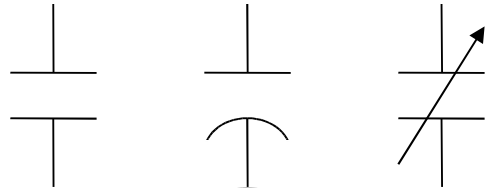

standard cap | electrolytic cap | adjustable cap

- **A capacitor is a component that holds or releases electrical charge**
- **The rate of charge can be controlled with a resistor**
- **Measured in Farads or μF, nF, pF**

Capacitor values

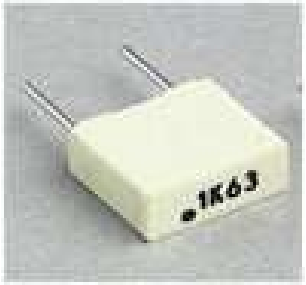

- Capacitors are marked with their value in pF (Pico Farads)

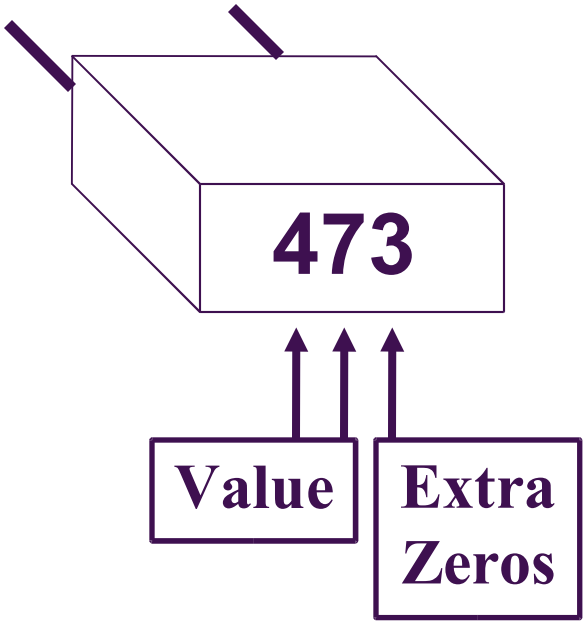

1F = 1000μF
1μF = 1000nF
1nF = 1000pF

Capacitor values

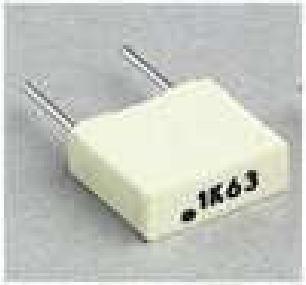

- Capacitors are marked with their value in pF (Pico Farads)

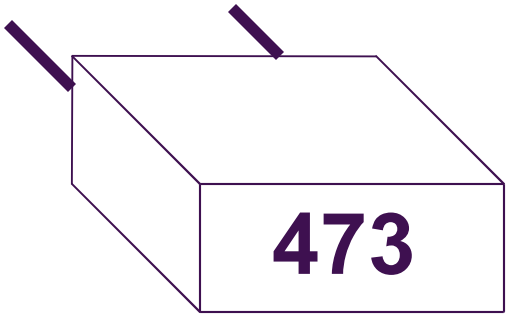

1F = 1000μF
1μF = 1000nF
1nF = 1000pF

47 000 pF

Capacitor values

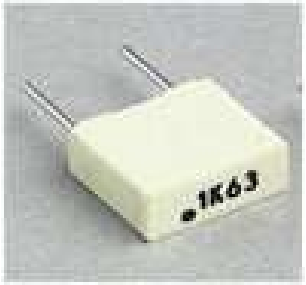

- Capacitors are marked with their value in pF (Pico Farads)

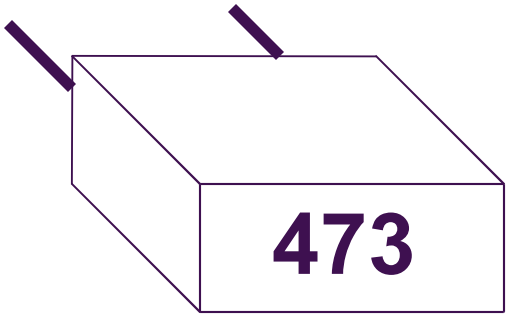

1F = 1000μF
1μF = 1000nF
1nF = 1000pF

47 000 pF
47 nF

Components - Resistors

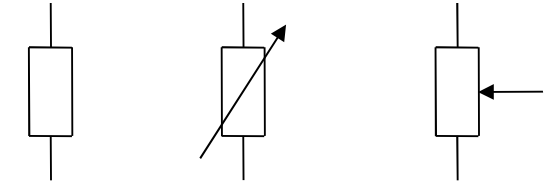

- **Resistors are used to control the rate at which current flows in a circuit**
- **Current = Volts / Resistance**
- **Measured in ohms (Ω)**
  - **KΩ, MΩ**

0	1	2	3	4	5	6	7	8	9

Resistors values

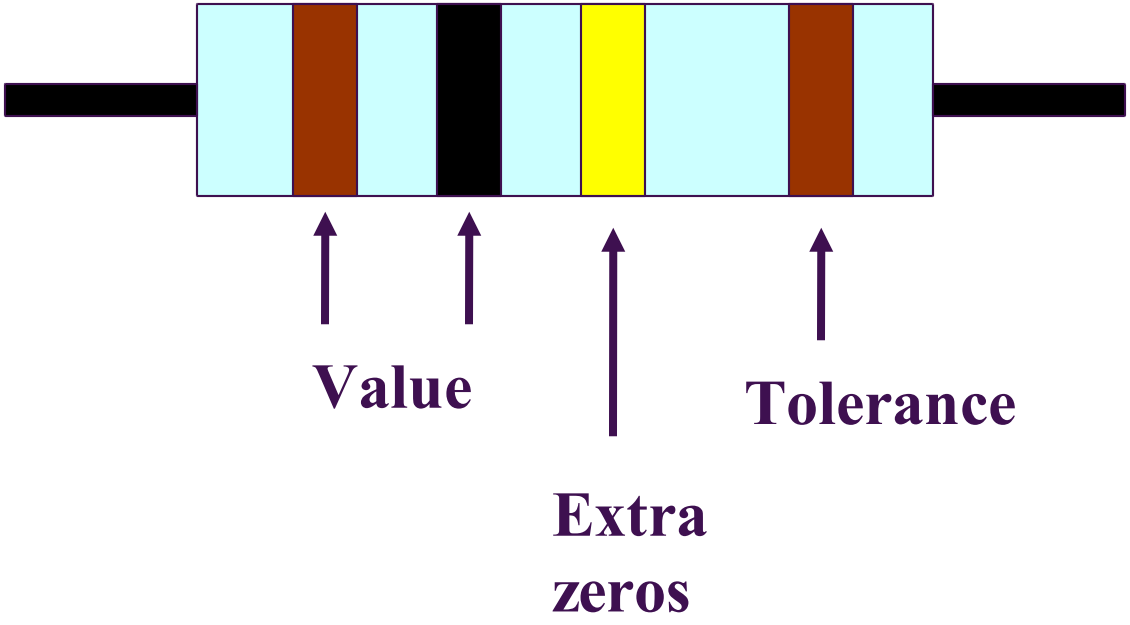

Resistors values

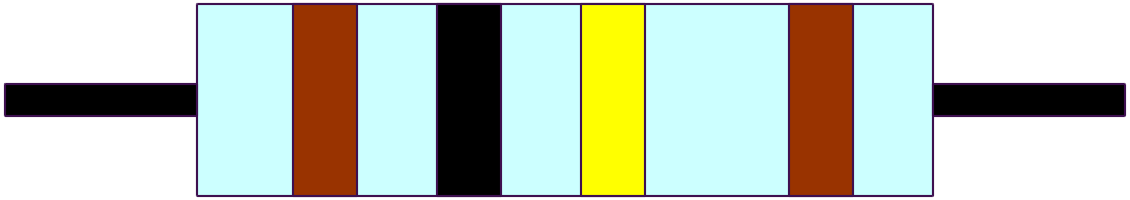

1	0	4

0	1	2	3	4	5	6	7	8	9

Resistors values

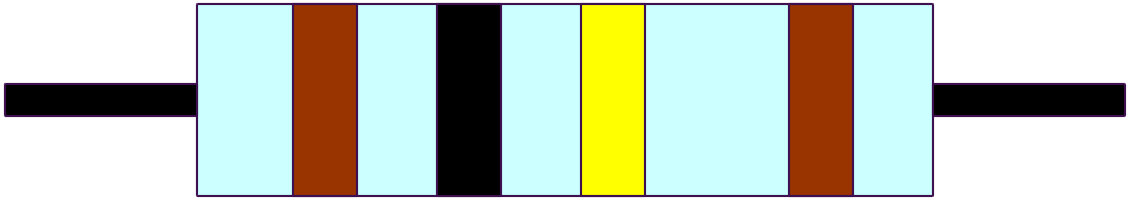

1	0	4

= 10 0000Ω

0	1	2	3	4	5	6	7	8	9

Resistors values

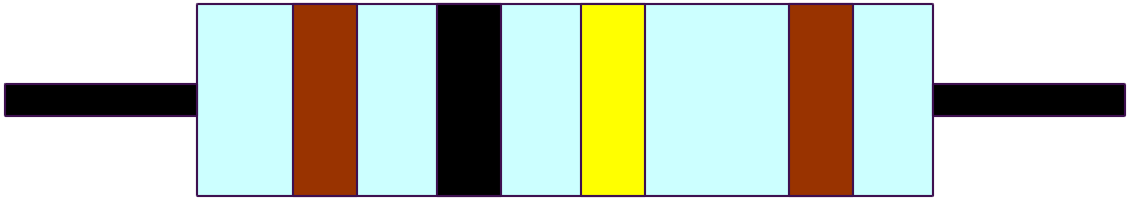

1	0	4

= 100,000Ω

= 100KΩ

0	1	2	3	4	5	6	7	8	9

Resistors

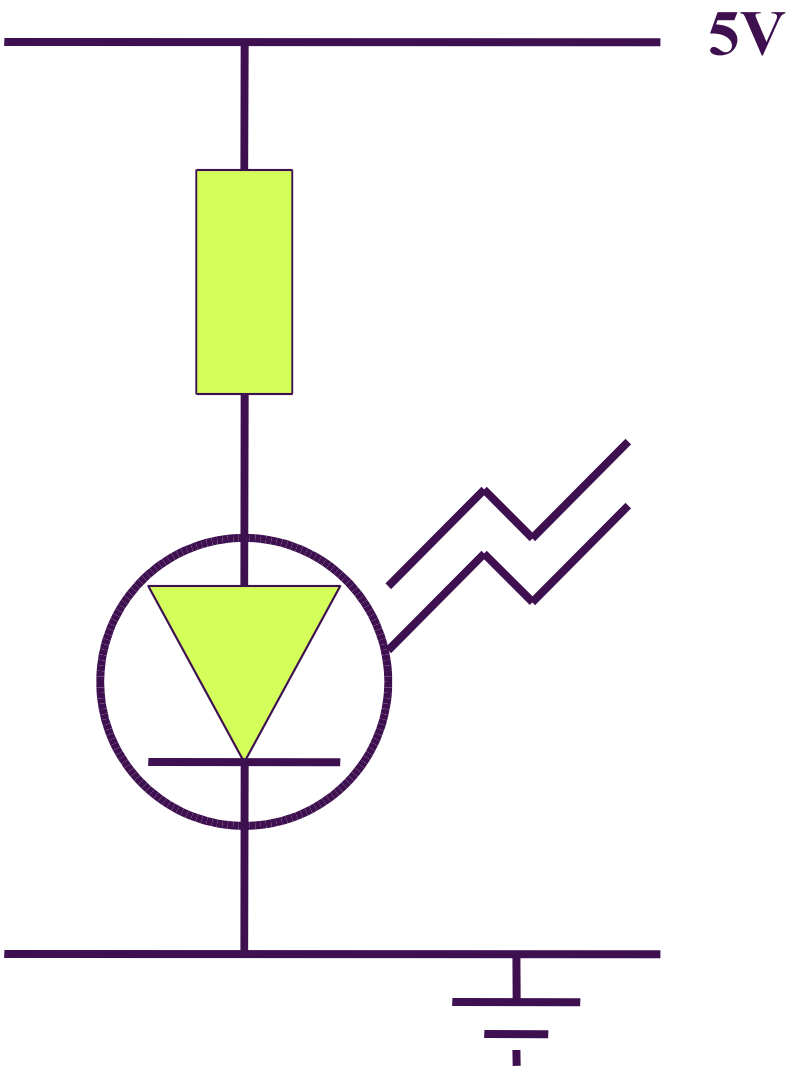

Resistors

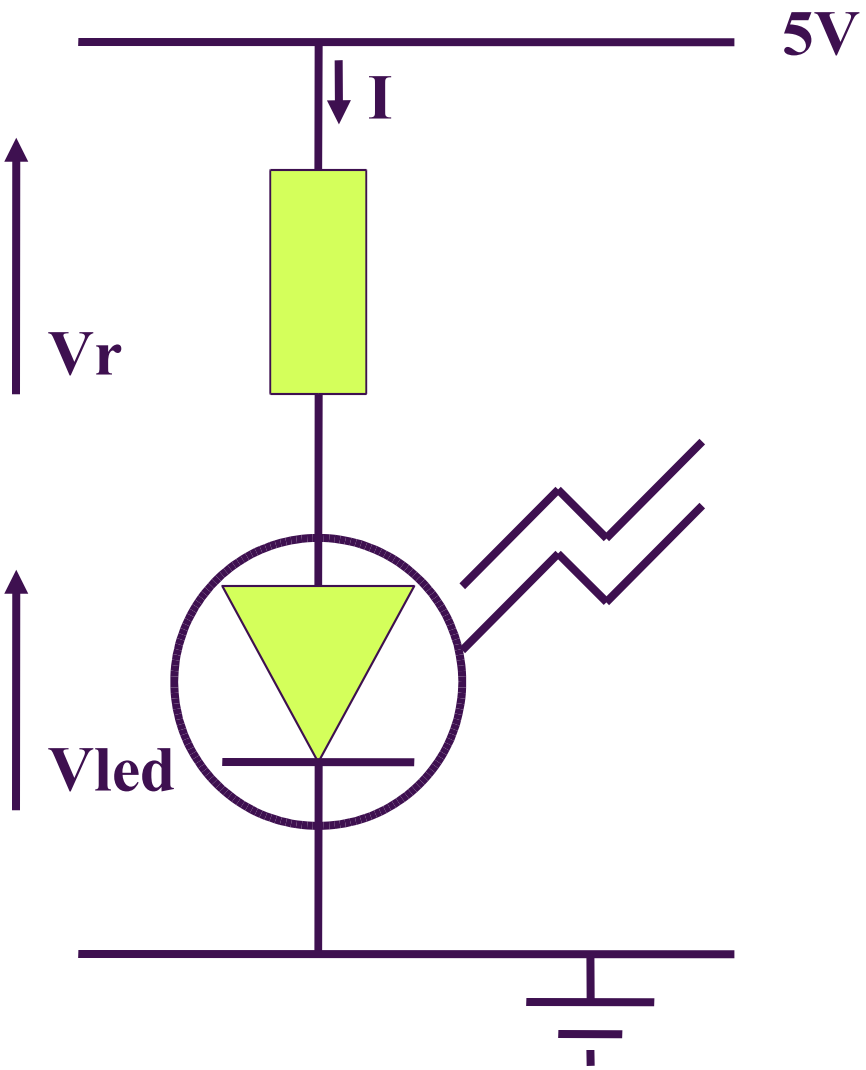

Resistors

From the LED data sheet

Vled = 2V
Itypical = 10 mA

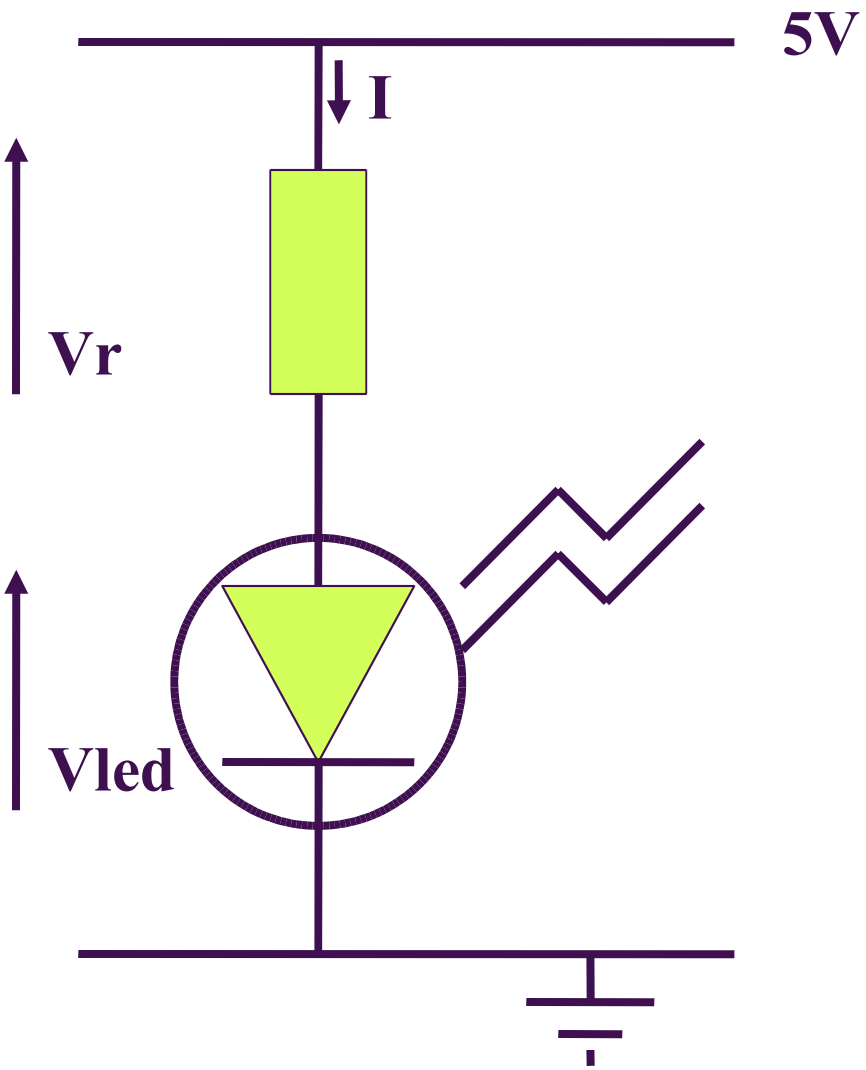

Resistors

From the LED data sheet

Vled = 2V
Itypical = 10 mA

So
Vr = 3V

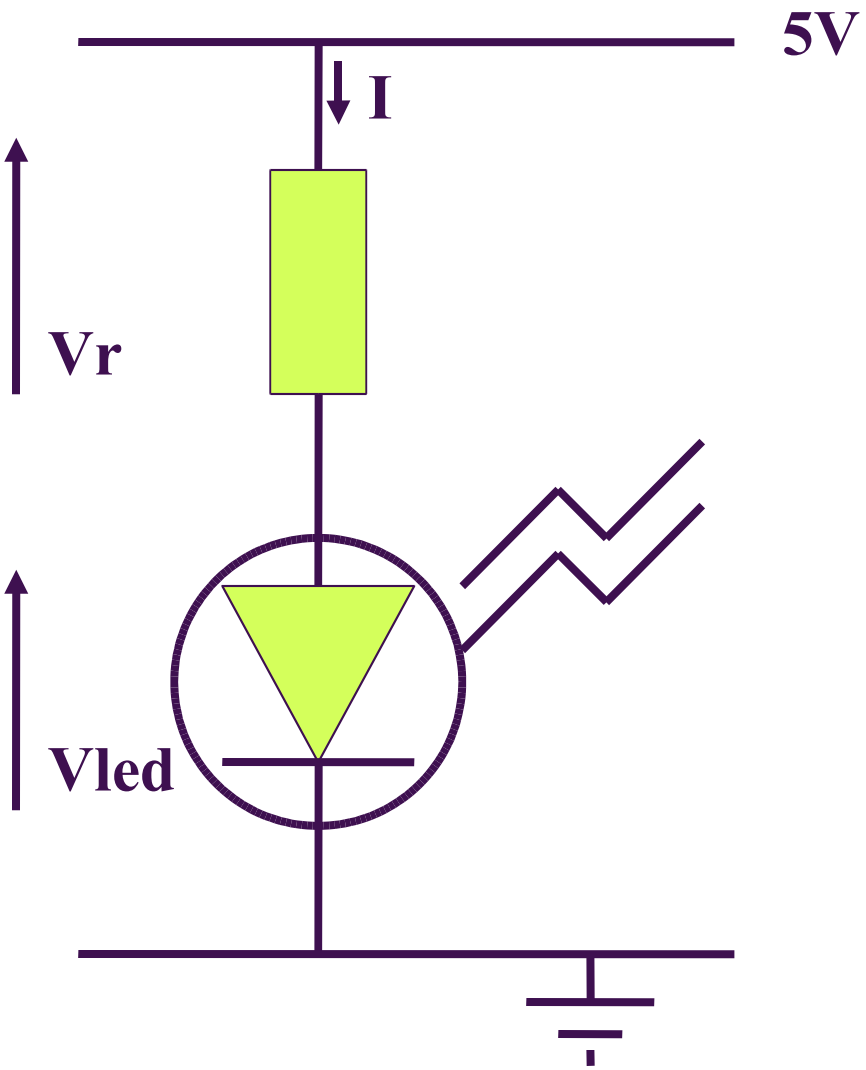

Resistors

I = 10 mA, Vr = 3V

$$R = \frac{V}{I} \quad \text{(ohms law)}$$

$$R = \frac{3}{0.010}$$

R = 300 Ω

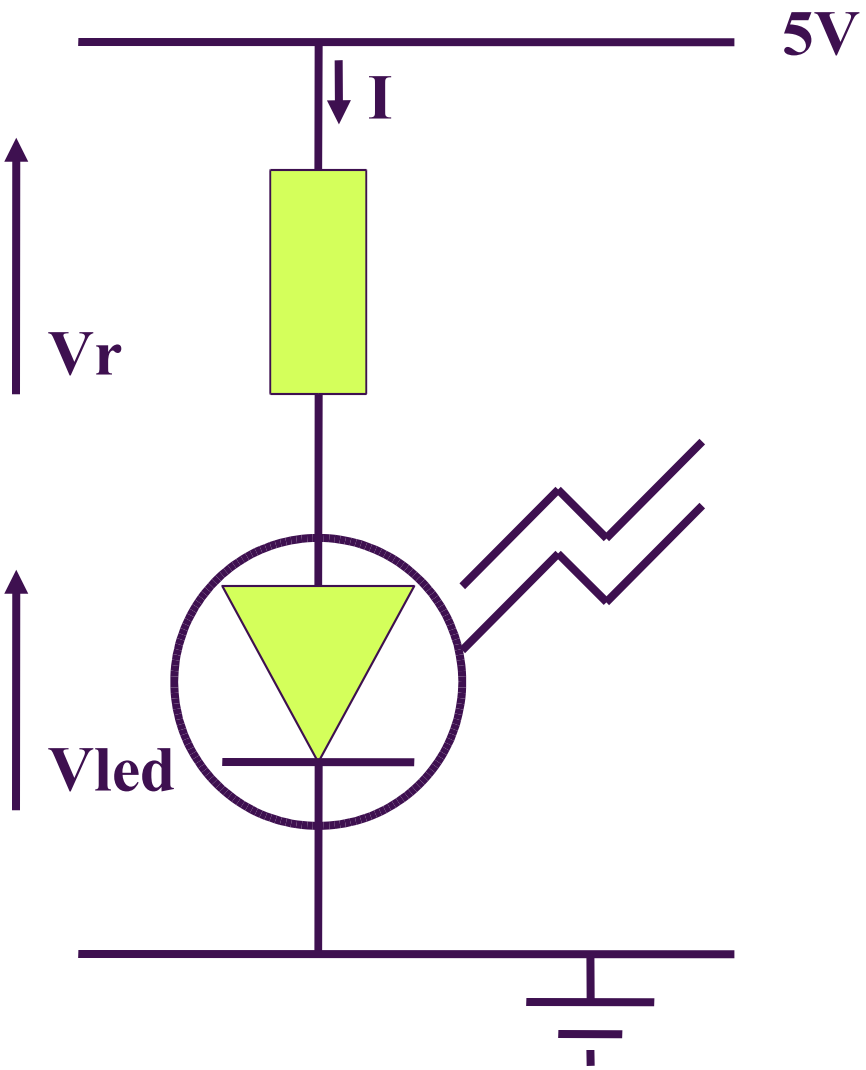

Components - Diodes

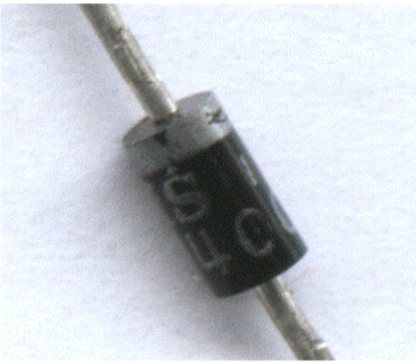

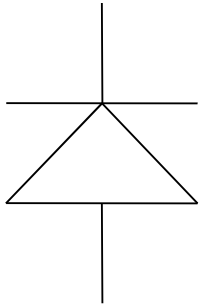

- Diodes let current flow in one direction, but stop it from flowing in the other
- Uses
  - Reverse voltage protection
  - Power regulation

Components - Transistors

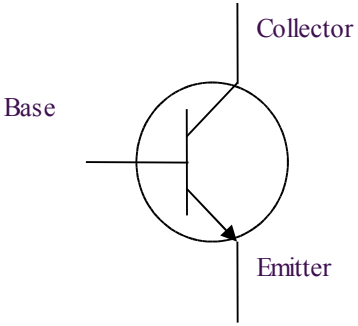

- A transistor in its simplest form is an electronic switch
- NPN or PNP
- 3 legs (Collector, Emitter, Base)
- When BE > 0.7V current flows between collector and emitter (the transistor is turned on)

Components - Transistors

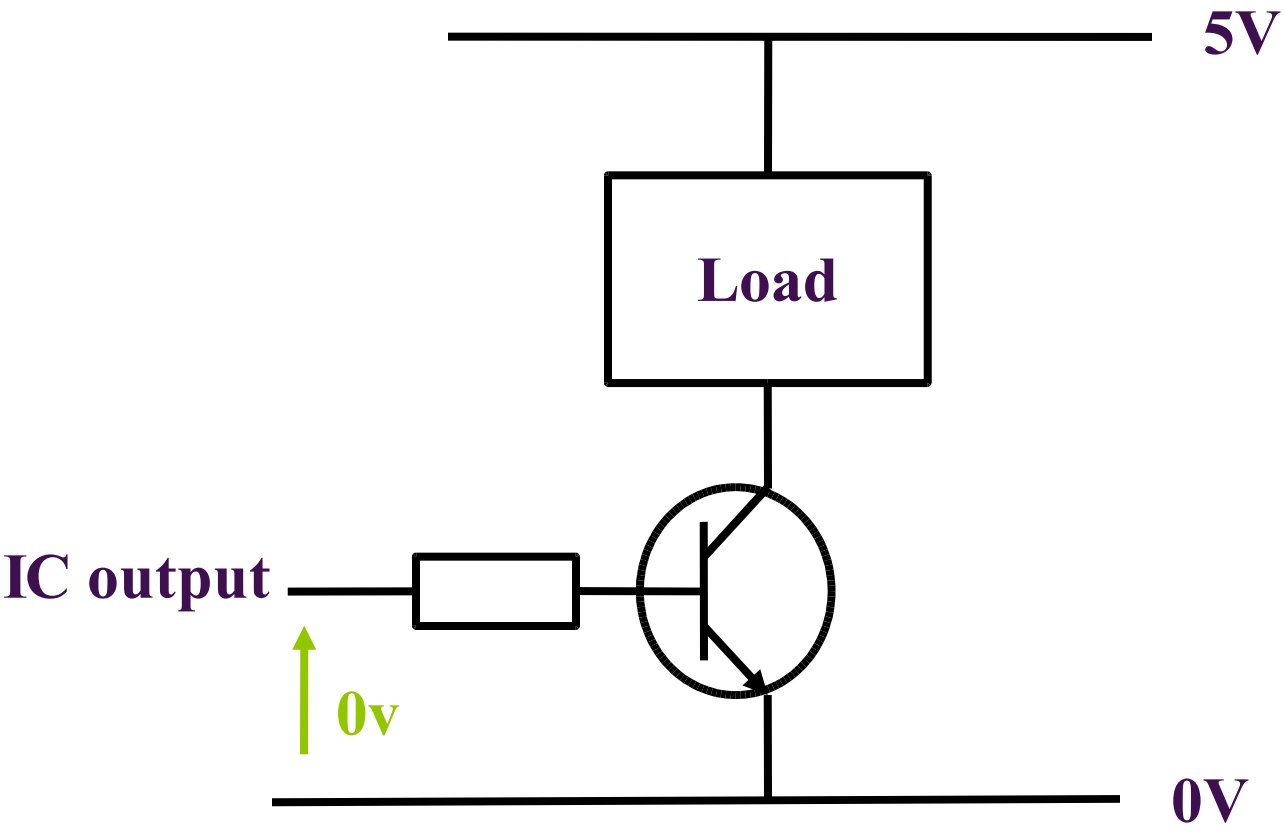

Components - Transistors

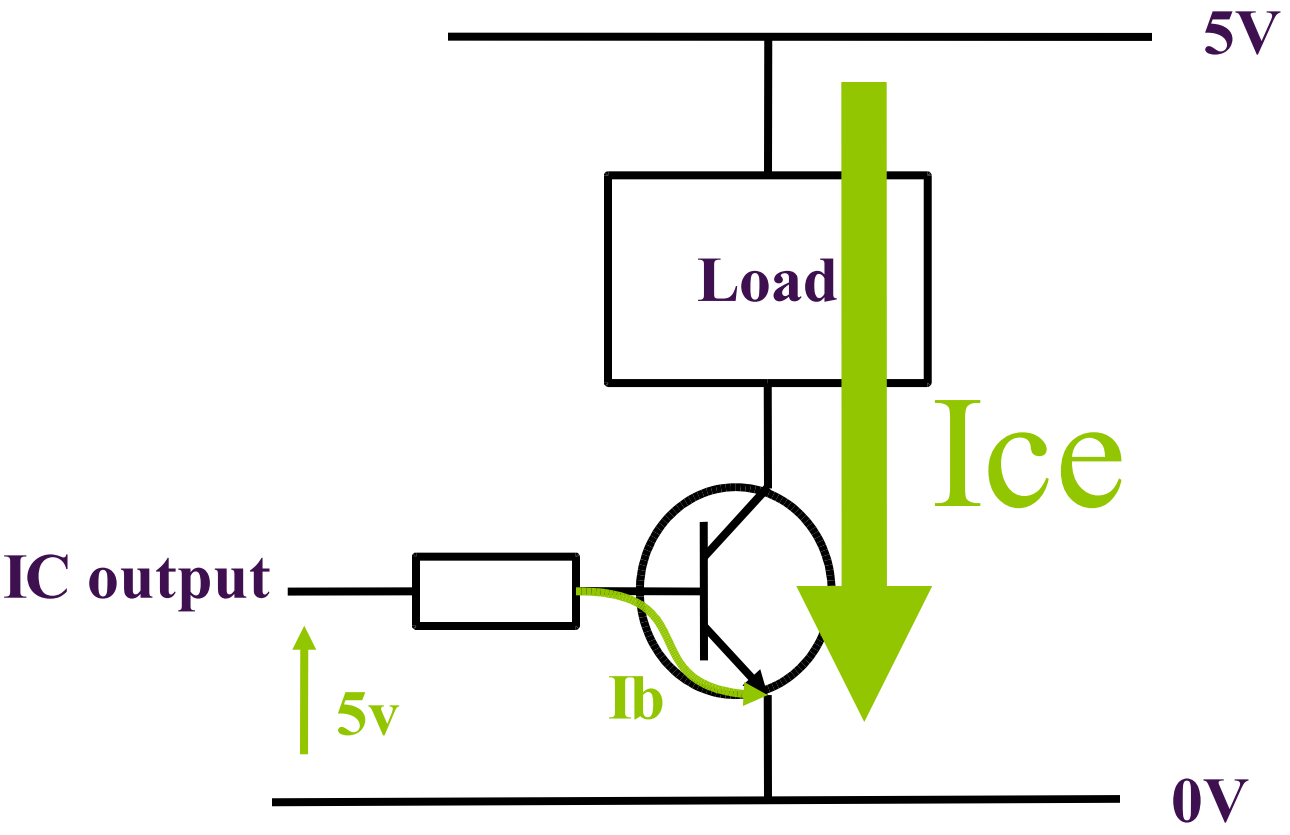

Multimeter's

- A multimeter is a number of meters in one
  - Voltage, Current & Resistance
- Dial sets type of reading & scale
- Voltage - across component
- Resistance - across component
- Current - through circuit

Multimeter's selecting a setting

Dial

A = Amps (current)

V = Voltage

Ω = Resistance

Connections

Common - Black lead

V / Ω or A - Red lead

Multimeter's

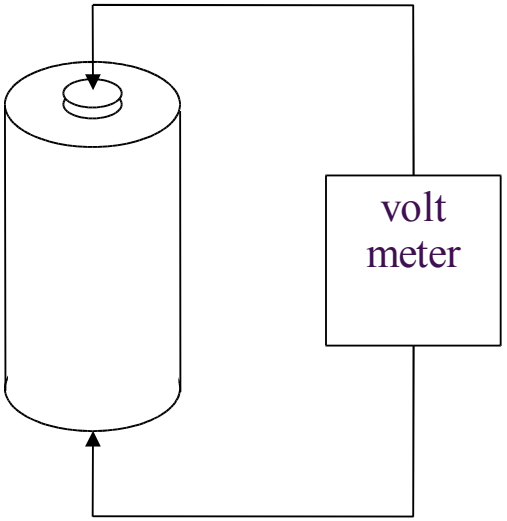

Voltage is measured across (in parallel to) the device or circuit under test.

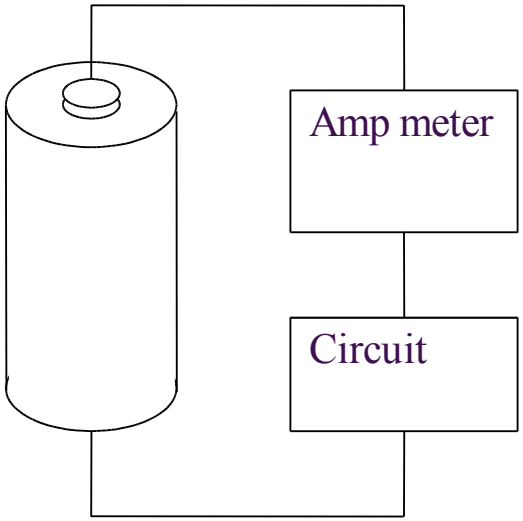

Current is measured by placing the meter in series with the device or circuit under test.