Battery operated dimmer light project

This application note describes a simple circuit using a transistor to vary the brightness of a bulb, making it an ideal circuit for use in a model theatre.

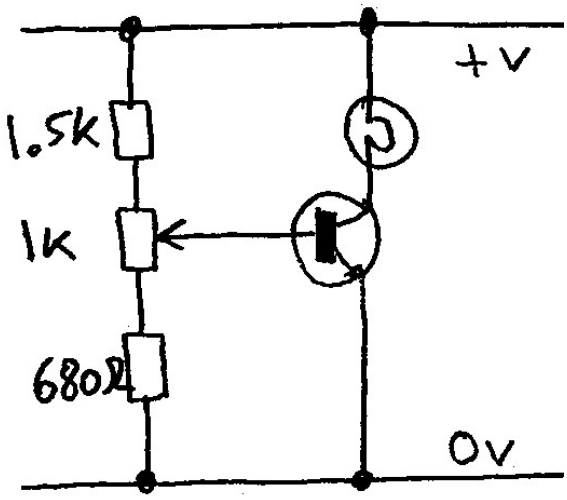

How it works

The circuit uses a potential divider to feed a voltage into the base of the transistor. The middle resistor in the potential divider is a variable resistor, which allows the voltage to be adjusted from around 0.6 volts to 1.5 volts. The characteristics of transistors are such that they don't change from being off to on instantly as the voltage changes. Instead there is part of their operation at the point where they begin to turn on where the amount of current flowing through the collector to the emitter can be controlled. By using the three resistors in the way they are connected we make use of this feature to limit the current flow and therefore the brightness of the bulb.

Parts list

Description	Qty
2x AA battery cage, with flying leads	1
1KΩ resistor	1
680KΩ resistor	1
1 K potentiometer	1
Transistor BC337-25	1
Bulb holder	1
3.5 volt bulb	1

Kitronik custom kitting service

These parts are available individually bagged, by using the Kitronik custom kitting service. Contact our sales team for more details. Price per kit:

Qty	10 - 24	25 - 49	50 - 99	100 - 249	250+
Cost	£1.73	£1.28	£1.13	£1.05	£0.95