Light or temperature activated switch

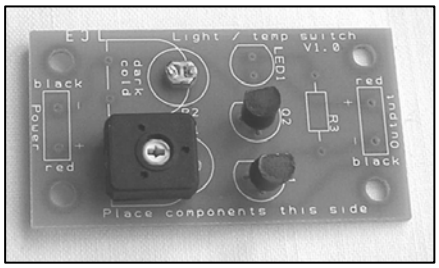

Application notes

Technical specification

Overview
The light or temperature switch uses a sensor in conjunction with a variable resistor to allow the temperature or light level to be set. These can be placed in two configurations to give a light or dark activated board or a hold or cold activated board. A Darlington pair transistor is used, which allows high loads to be switched.

Supply Voltage
Minimum = 3V
Maximum = 45V

Output voltage
Vout = Supply voltage – 0.9V

Output current
Maximum = 0.5A

Guidance note
You should ensure that you have a stable power source when using the output to switch on high output loads. This is because if the power source is unable to provide enough power this may result in a supply voltage dip and cause output to switch off. At this point the voltage is likely to recover and turns the output on again. The output would then be in state where it is rapidly switching on and off.

Garden lamp that switches on automatically at night

As shown to the right, by simply adding a battery holder and light bulb to a PCB built in the 'dark activated' configuration you can create a garden light that automatically comes on in the dark.

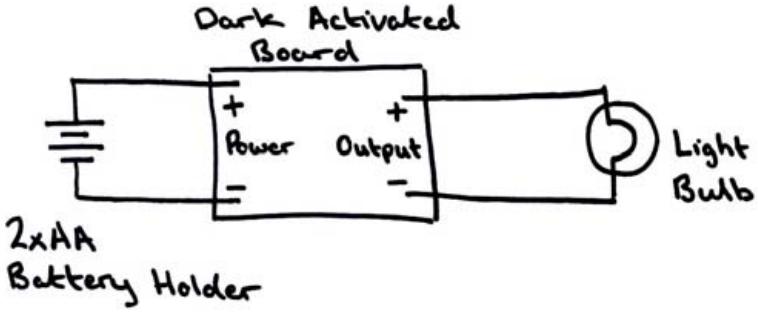

Parts list to build 100 garden lights:

Part no.	Description	Qty	Unit price	Total price
2112	Light activated switch	100	£0.94	£94.00
2232-25	2 x AA battery cage with leads, pack of 25	4	£3.10	£12.40
3517	MES lamp holder economy, pack of 50	2	£2.70	£5.40
3519	MES lamp 2.5V, pack of 50	2	£2.95	£5.90
2201-40	Zinc Chloride AA batteries, box of 40	5	£4.80	£24.00
		Total =		**£141.70**
		Per student =		**£1.42**

Draw alarm, which sounds when a dark draw is opened

As shown to the right, by simply adding a battery holder, switch and buzzer to a PCB built in the 'light activated' configuration you can create an alarm that sounds when a dark draw is opened and the PCB is exposed to light. The switch is to allow the alarm to be activated or deactivated.

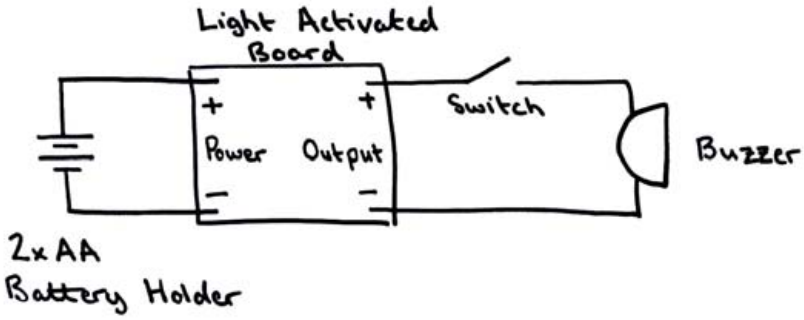

Parts list to build 100 draw alarms:

Part no.	Description	Qty	Unit price	Total price
2112	Light activated switch	100	£0.94	£94.00
2232-25	2 x AA battery cage with leads, pack of 25	4	£3.10	£12.40
3404	Miniature DPDT slide switch, pack of 10	10	£1.00	£10.00
3301	Pack of 10 piezo buzzers	10	£5.00	£50.00
2201-40	Zinc Chloride AA batteries, box of 40	5	£4.80	£24.00
		Total =		**£190.40**
		Per student =		**£1.90**

Line following buggy (using 2 light activated boards)

As shown below, by using two light activated boards and two motors it is possible to make a line following buggy. The boards just need to be mounted close to the ground with the light sensor facing down. Normally the buggy will travel in a straight line. If one of the sensors crosses the dark line it turns off the motor on that side. This will steer the buggy away from the line. Once it has been steered away from the line the motor will turn back on. This circuit could be used with lego motors.

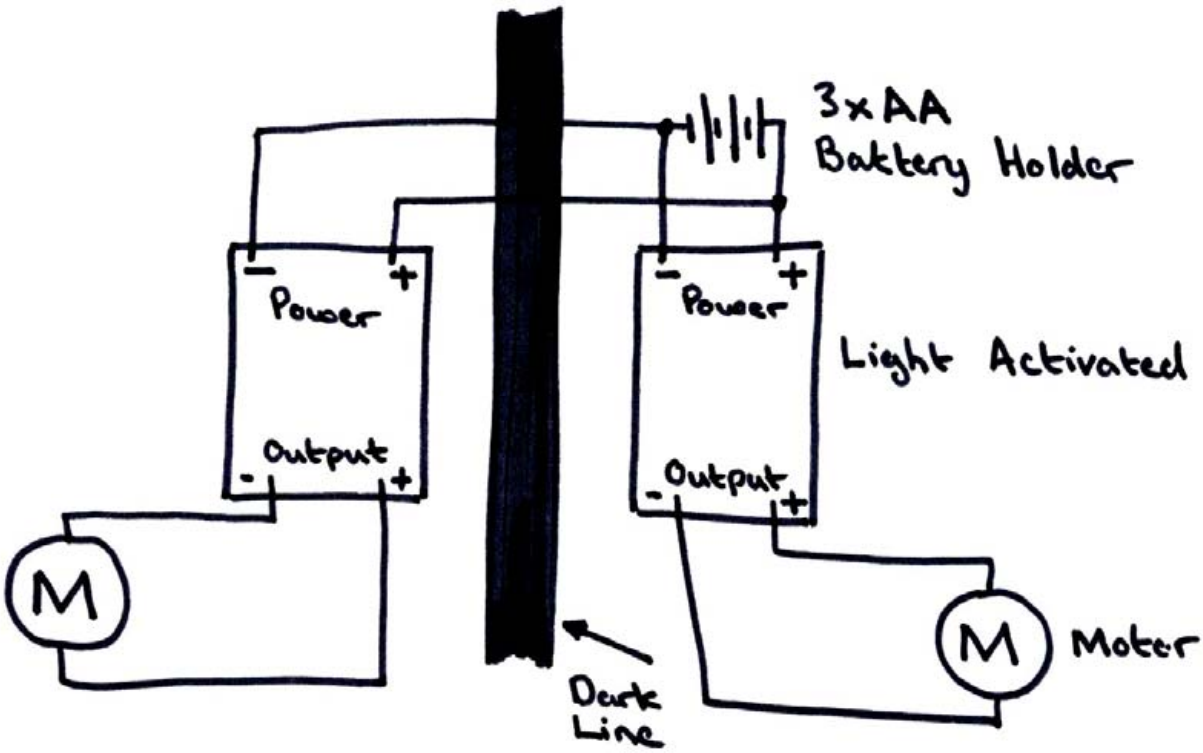

Parts list to build 100 buggies:

Part no.	Description	Qty	Unit price	Total price
2112	Light activated switch	200	£0.94	£198.00
2234-25	3 x AA battery cage with clip, pack of 25	4	£6.20	£24.80
2238-25	PP3 Battery clip lead, pack of 25	4	£2.00	£8.00
2501	Pack of 10 motors	20	£3.25	£65.00
2503	Pack of 10 motor clips	20	£1.95	£39.00
2201-40	Zinc Chloride AA batteries, box of 40	8	£4.80	£38.40
		Total =		**£373.20**
		Per student =		**£3.73**

Note: No gear box parts included

Heat activated fan/cooler

By using a temperature activated board built in the heat activated option and the addition of motor it is possible to make a heat activated fan (shown right). The fan can be set up to come on at a desired temperature by adjusting the variable resistor.

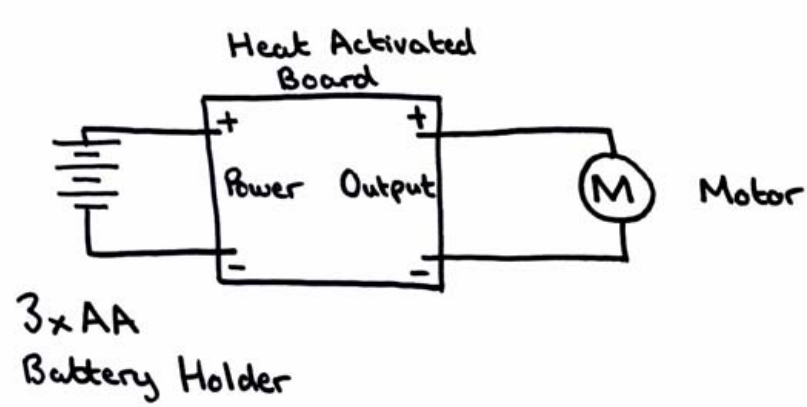

Parts list to build 100 heat activated fans:

Part no.	Description	Qty	Unit price	Total price
2113	Temperature activated switch	100	£1.04	£104.00
2234-25	3 x AA battery cage with clip, pack of 25	4	£6.20	£24.80
2238-25	PP3 Battery clip lead, pack of 25	4	£2.00	£8.00
2501	Pack of 10 motors	10	£3.25	£32.50
2503	Pack of 10 motor clips	10	£1.95	£19.50
2201-40	Zinc Chloride AA batteries, box of 40	8	£4.80	£38.40
		Total =		**£227.20**
		Per student =		**£2.27**

Babies bath over temperature indicator

By using a temperature activated board built in the heat activated option it is possible to make a simple babies bath too hot indicator. The 'too hot' state can be indicated by an LED that light by the addition of the 150Ω resistor (in R3) and red LED (in LED1).

The thermistor should be mounted on separate flying leads as the PCB should not be immersed in water.

Parts list to build 100 babies bath over temperature indicators:

Part no.	Description	Qty	Unit price	Total price
2113	Temperature activated switch	100	£1.04	£104.00
2234-25	3 x AA battery cage with clip, pack of 25	4	£6.20	£24.80
2238-25	PP3 Battery clip lead, pack of 25	4	£2.00	£8.00
3003-150R	150ohm resistor, pack of 100	1	£0.50	£0.50
3504	Red 5mm LED, pack of 50	2	£1.80	£3.60
2201-40	Zinc Chloride AA batteries, box of 40	8	£4.80	£38.40
		Total =		**£179.30**
		Per student =		**£1.79**