Thyristors

Step 1 - Thyristor off

A thyristor acts in the same way as a diode in that it will allow current (electricity) to flow from the Anode to the Cathode. It can not flow in the other direction.
When a circuit is powered up and there is no voltage on the gate of the thyristor no electricity flows between the anode & cathode.

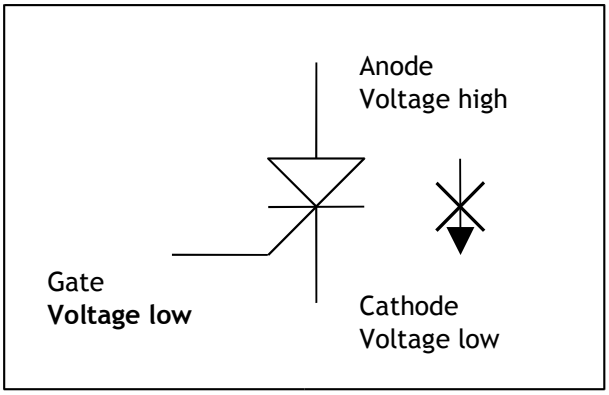

Step 2 - Thyristor turned on

The thyristor has a special characteristic where, the flow of electricity through the device can only happen once the Gate voltage (signal) has gone to a high voltage.

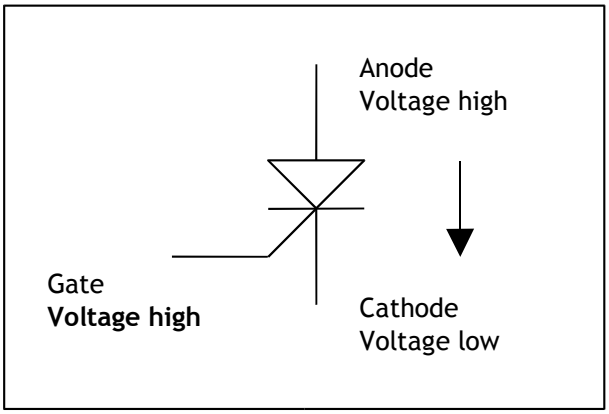

Step 3 - Thyristor latched on

This flow of electricity will continue even when the Gate returns to a low voltage. It is like a tap that once turned on can not be turned off. It is this characteristic that allows thyristors to be used in a latching circuit, where a high voltage signal on the Gate is used to latch on the flow of electricity through the device.

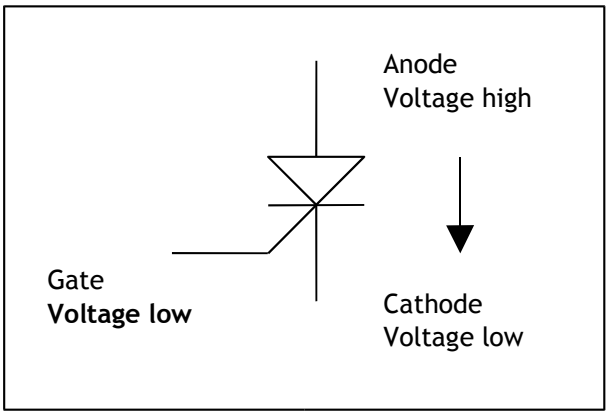

Step 4 - Thyristor turned off
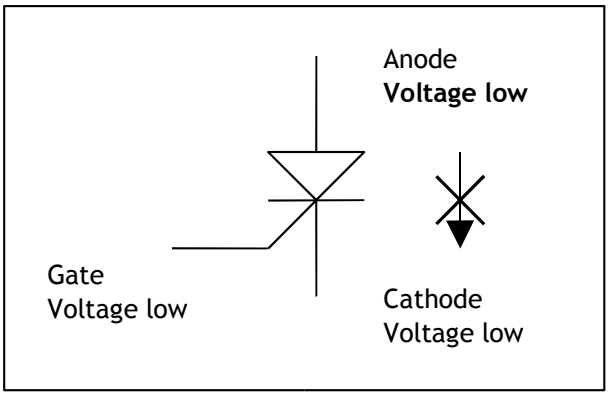
The only way to unlatch (or reset) the thyristor is to stop the flow of electricity through the device by taking the voltage on the Anode low. When the Anode returns to a high voltage level, electricity will not be able to flow thought the device until the Gate is taken to a high voltage again.